Copyright FCI.

FCIconnect.com

PRODUCT NUMBER	PITCH
KYxx01x300J0G	5.00 mm

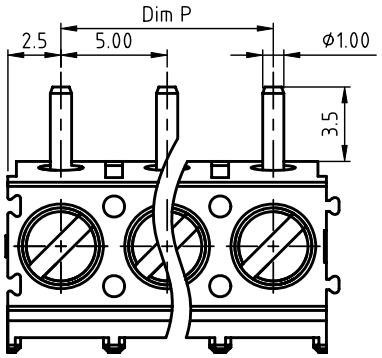

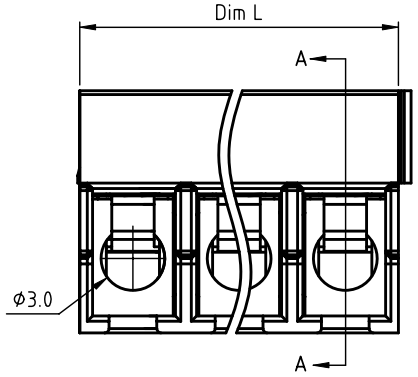

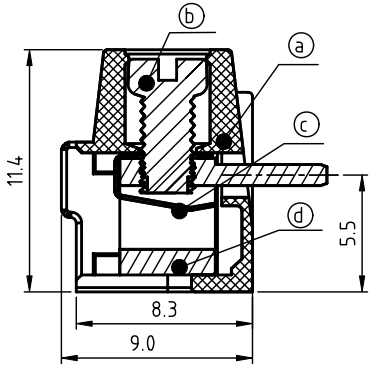

SECTION A-A

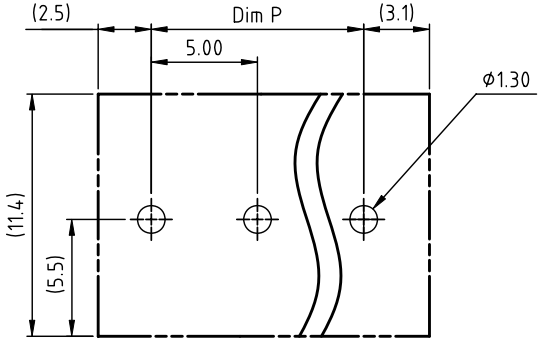

RECOMMENDED P.C.B LAYOUT
TOP VIEW

Materials
Item ⓐ Terminal housing: Thermoplastic (UL 94V-0)
Item ⓑ Terminal screw: Steel Zinc plating("-" slot type)
Item ⓒ Wire guard: Stainless steel
Item ⓓ Terminal body: Brass(CuZn),Tin Plated

Electrical	cULus	CQC
Voltage rating:	300VAC	250VAC
Current rating:	15A	24A
Wire range:		
Solid wire:	12-24 AWG	0.2-2.5mm²
Stranded wire :	12-24 AWG	0.2-2.5mm²
Torque:	3.0 Lb-In	0.4N.m
Screw: M2.6		
Wire strip length: 5-6mm		
Withstanding Voltage:	1.6KV	2KV
Operating temperature: -40°C to +115°C		
Soldering temperature: 260°C±5°C/5 Sec		
Safety Approval:	c UL us	CQC

N = Number of poles
Dim L=Nx5.0
Dim P=(N-1)x5.0

Poles \ Dim.	Dim L	Dim P
2-6p	±0.15	±0.10
7-12p	±0.20	±0.20
13-18p	±0.30	±0.25
19-24p	±0.40	±0.30

PART NO.: KY xx 01 x 3 00J0 G

End stackable
No. of poles
02 2 poles
03 3 poles
... ...
24 24 poles

Body Color
0 Black (RAL9005)
2 Red (RAL3001/D)
3 Orange(RAL2011/P)
4 Yellow(RAL1018/A)
5 Green(RAL6018/T)
6 Blue (RAL5015/A)
8 Grey(RAL7035/D)
9 White(RAL1102)
C Green(RAL6018/U)

RoHS compliant
(lead<4%)
In copper Alloy

mat'l. code	surface ASME Y14.5	tolerance ASME Y14.5	projection	product family TERMINAL BLOCK
ltr / ecn no / dr / date	tolerances unless otherwise specified			title TERMINAL BLOCK
	angles X°±1°	linear X.±0.5 / X.X±0.3 / X.XX±0.1	MM	WIRE PROTECTOR,ROUND HOLE,90D WIRE INLET
	dr EVIN ZHONG 040214		scale	dwg no KYxx01x300J0G sheet 1 of 1 size A4
	engr EVIN ZHONG 040214			
	chr HANKE FENG 040214			
	appd SHI JUN 040214			type CUSTOMER Drawing
sheet index / revision A / sheet 1				