PRODUCT NUMBER

77311–YXX–XXLF

- PLATING SEE SHEET 2
- PIN STYLE SEE SHEET 2
- TOTAL NB OF POSITIONS 01 TO 36
- OPTION LETTER SEE NOTE 7
- RoHS COMPATIBLE SEE NOTE 6

PRODUCT NUMBER (BERGSTRIP PACKAGING)

77311–YXX–00LF

- PLATING
  - 1= 0.76µm GOLD/GXT ON CONTACT AREA, 2µm TIN MIN ON TAILS
  - 8= 0.38µm GOLD/GXT ON CONTACT AREA, 2µm TIN MIN ON TAILS
  - 4= 2.0µm TIN MIN FULL PLATED
  - 1.27µm NICKEL MIN UNDERLAYER FOR ALL PLATING VERSIONS
- INDICATES THE PRODUCT IS RoHS COMPATIBLE, SEE NOTE 6
- POSITIONS PER REEL : 00=36,000 (BERGSTRIP)

PIN STYLE	MATING	SOLDER	OAL
01	5.84	2.41	10.8
02	5.84	3.42	11.8
18	5.84	3.05	11.43
22	7.75	3.05	13.35
24	6.75	2.9	12.2
27	6.6	2.66	11.8

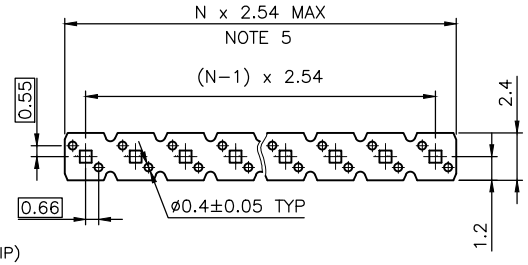

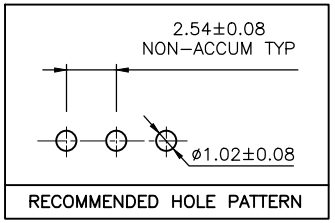

RECOMMENDED HOLE PATTERN

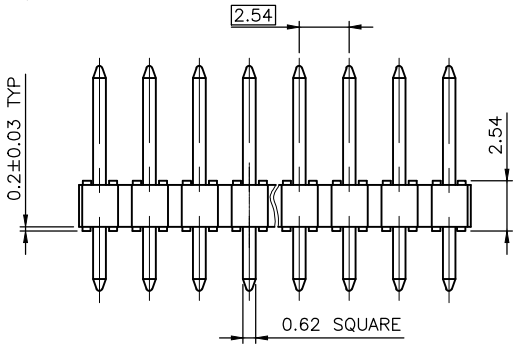

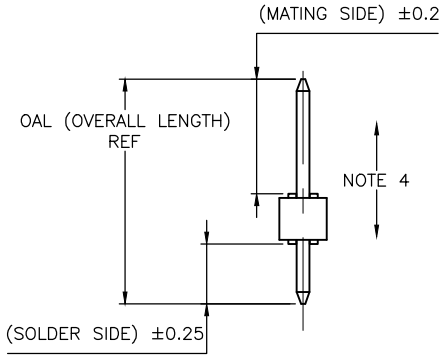

NOTES:

1. HOUSING MAT'L : HIGH TEMPERATURE THERMOPLASTIC. UL94V–0 COLOR: BLACK
2. PIN MATERIAL : PHOSPHOR BRONZE
3. BERGSTIK PRODUCT PACKAGED IN POLYBAGS. BERGSTRIP PRODUCT PACKAGED PER REELS.
4. 9N MIN RETENTION IN EITHER DIRECTION
5. TO DETERMINE DIMENSIONS :
   N = NUMBER OF POSITIONS PER ROW
   EXAMPLE : 8 POS N x 2.54 = 20.32mm
6. RoHS COMPATIBLE PRODUCT SPECIFICATIONS
   a – PLATING:
   – "LF" MEANS THE PRODUCT IS LEAD–FREE, 2µm MINIMUM MATTE TIN OVER 1.27µm MINIMUM NICKEL UNDERPLATE.
   b – MANUFACTURING PROCESS COMPATIBILITY
   – THE HOUSING WILL WITHSTAND EXPOSURE TO 260°C ±5°C SOLDER BATH TEMPERATURE FOR 5 SECONDS IN A WAVE SOLDER APPLICATION WITH A 1.6mm MIN THICK CIRCUIT BOARD.
   c – LABELING:
   – MEETS PACKAGING SPECS AS PER GS–14–920
   d – LEGAL STATEMENT: SEE GS–47–0004
7. OPTION LETTER :
   T = TUBE PACKAGING WITHOUT PICK UP CAP
   K = TAPE & REEL PACKAGING, WITHOUT PICK UP CAP ONLY FOR P/N 77311–462K04(LF) AND 77311–462K05(LF)
   KV = TAPE & REEL PACKAGING WITHOUT PICK UP CAP FOR CUSTOMER DEDICATED PART ONLY FOR P/N 77311–462KV04LF
   C = HIGHT RETENTION FEATURES, SEE SHEET 2
   R = RETENTION FEATURES, SEE SHEET 2
   IF RENTENTION FEATURE "R" AND TUBE PACKAGING "T" ARE BOTH REQUIRED OPTIONAL LETTER "R" WILL APPEAR INSTEAD OF THE FIRST DASH
   EXAMPLE : 77311R424T03LF

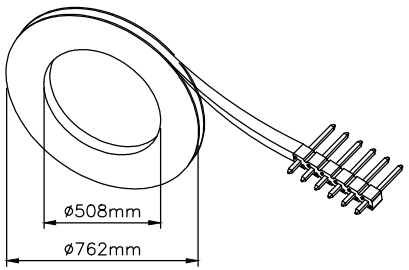

BERGSTRIP HEADER REEL PACKAGING DIMENSIONS

ltr	ecn no	dr	date
BX	B–18917	LMU	14.09.26
BY	B–19692	JCOI	14.12.09
CA	B–19720	BVE	14.12.11
CB	B–19782	AMA	14.12.18
CC	B–20169	BVE	15.02.12
CD	B–20497	BVE	15.03.18
CE	B–20596	AMA	15.03.30

sheet index	revision	CE	BU
	sheet	1	2

mat'l. code: SEE NOTES

surface: ISO 1302

tolerance: ISO 406 ISO 1101

tolerances unless otherwise specified: angles; linear .x ±0.3, .xx ±0.15, .xxx ±0.05

dr	D.LE	01.01.24
engr	JM.C	01.01.24
chr	JM.C	01.01.24
appd	JF.N	01.01.24

projection

mm

scale 5:1

product family: BERGSTIK

title: UNSHR.HEADER STR SR TMT

dwg no: 77311 sheet 1 of 2 size A3

type: CUSTOMER Drawing

Copyright FCI
FCIconnect.com

form: A3

PLATING
1 = 0.76µm GOLD/GXT ON CONTACT AREA, 2µm TIN MIN ON TAIL
4 = 2µm TIN MIN FULL PLATED
5 = 0.25µm GOLD/GXT ON CONTACT AREA, 2µm TIN MIN ON TAIL
8 = 0.38µm GOLD/GXT ON CONTACT AREA, 2µm TIN MIN ON TAIL
G = 0.76µm FULL GXT
S = 0.38µm FULL GXT
T = 2µm TIN MIN FULL PLATED INCLUDED PIN TYP
– 1.27µm NICKEL MIN UNDERLAYER FOR ALL PLATING VERSIONS

RETENTION FEATURES

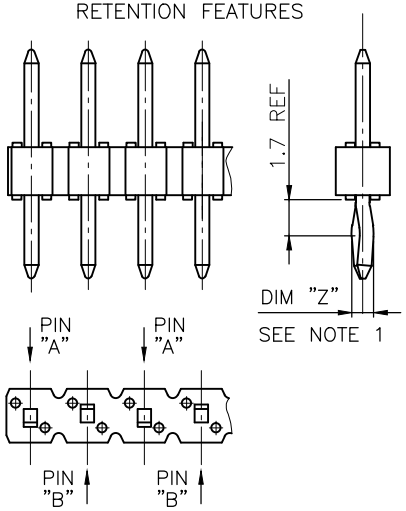

RETENTION FEATURES :

1 – PART NUMBER 77311–XXXRXXLF: DIM "Z"=(0.99)
PART NUMBER 77311–XXXCXXLF: DIM "Z"= 1.05MIN –1.15MAX

2 – PINS "A" AND "B" USED FOR RETENTION.

3 – DIRECTION OF RETENTION SHOWN BY ARROWS.

4 – ON 4 TO 36 POSITIONS HEADER; RETENTION IS IN MID POSITION OF HEADER (4 CENTRAL PINS)

5 – FOR RETENTION OPTION , SOLDER TAIL LENGTH TO BE 2.9 MIN UP TO 3.5 MAX.

6 – HOUSING MATERIAL FOR P/N 77311–4AJC03LF & 77311–TAJC03LF HIGH TEMPERATURE THERMOPLASTIC UL94V–0 COLOR : NATURAL

PLATING SPECIFICATIONS :

7 – ONLY FOR PLATING 1XX, 8.0MM GOLD / GXT PLATING AREA FROM PIN TYPE ON MATING SIDE

PRODUCTS SPECIFICATIONS

PIN STYLE	MATING	SOLDER	OAL
01	5.84	2.41	10.8
02	5.84	3.42	11.8
03	5.72	5.09	13.35
05	5.72	10.14	18.4
08	5.72	17.78	26.04
15	8.51	2.55	13.6
18	5.84	3.05	11.43
19	12.83	3.03	18.4
20	15.37	3.04	20.95
22	7.75	3.05	13.35
24	6.75	2.9	12.2
25	8.51	3.18	14.22
27	6.6	2.65	11.8
26	15.57	2.84	20.95
29	17.5	3.46	23.5
32	10.3	3.05	15.9
38	5.84	3.82	12.2
39	11.2	3.05	16.8
46	8.08	2.98	13.6
58	14.47	3.05	20.06
62	13.5	3.05	19.09
70	6.54	3.50	12.57
83	20.46	3.00	26.00
85	5.72	8.51	16.76
87	6.98	3.05	12.57
91	5.6	10.21	18.35

PRODUCTS SPECIFICATIONS

PIN STYLE	MATING	SOLDER	OAL	
92	5.65	12.76	20.95	
93	6.00	4.81	13.35	
94	15.60	3.20	21.25	NOTE 7
95	10.00	8.45	20.95	
96	10.95	3.05	16.55	
97	9.00	3.55	15.09	
98	3.00	1.35	6.84	
99	24.00	3.05	29.50	
AA	5.72	15.24	23.50	
AB		N/A		
AC	7.21	3.05	12.80	
AD	17.53	3.43	23.50	
AE	4.99	2.80	10.33	
AF	5.72	3.05	11.30	
AG	5.84	4.95	13.33	
AH	14.31	3.20	20.05	
AJ	8.90	3.40	14.85	NOTE 6
AK	25.06	3.00	30.80	
AL	3.30	3.30	9.14	
AM	9.26	3.05	14.85	
AN	7.60	4.40	14.47	
AP	7.80	3.30	13.60	
AR	18.86	2.41	23.81	
AS	11.91	1.45	15.90	
AT	4.60	4.60	11.61	
AU	12.10	3.10	17.70	
AV	6.30	6.30	15.10	
AW	9.16	1.80	13.50	

ltr	ecn no	dr	date
BU	B–20596	AMA	15.03.30
BN	B–18876	LMU	14.09.23
BP	B–18917	LMU	14.09.26
BR	B–19692	JCO	14.12.09
BS	B–20169	BVE	15.02.12
BT	B–20497	BVE	15.03.18

mat'l. code
surface ISO 1302
tolerance ISO 406 ISO 1101
tolerances unless otherwise specified
angles linear
projection
mm
scale N/A

dr	D.LE	01.01.24
engr	JM.C	01.01.24
chr	JM.C	01.01.24
appd	JF.N	01.01.24

product family BERGSTIK
title UNSHR.HEADER
STR SR TMT
dwg no 77311
sheet 2 of –
size A3
type CUSTOMER Drawing

sheet index
revision sheet

FCIconnect.com
Copyright FCI

form: A3