NOTES:
1. MATERIALS:
   HOUSING:
   "BLANK"=NYLON 6/6, UNFILLED UL94 V-2, COLOR: NATURAL
   "210"=NYLON 6/6, UNFILLED UL94 V-0, COLOR: NATURAL
   "BL"=NYLON 6/6, UNFILLED UL94 V-2, COLOR: BLACK
   "400"=NYLON 6/6, UNFILLED UL94 V-0, COLOR: BLACK
   TERMINALS:
   BRASS
2. TERMINAL PLATING:
   "BLANK"=.000035/(0.00090) MIN. BRIGHT TIN OVER
   .000020/(0.00050) MIN. COPPER
   GS2=.000015/(0.00038) MIN. SELECT GOLD AND
   .000100/(0.00254) MIN. SELECT MATTE TIN
   OVER .000050/(0.00127) MIN. NICKEL OVERALL
   GS=.000030/(0.00076) MIN. SELECT GOLD AND
   .000100/(0.00254) MIN. SELECT MATTE TIN
   OVER .000050/(0.00127) MIN. NICKEL OVERALL
   S=.000100/(0.00254) MIN. BRIGHT TIN OVER
   .000050/(0.00127) MIN. NICKEL
   MS=.000100/(0.00254) MIN. MATTE TIN OVER
   .000050/(0.00127) MIN. NICKEL
3. PRODUCT SPECIFICATION: PS-5556-001
4. PACKAGING: TRAY PACKED PER PK-5566-002
5. PART MATES WITH MINI-FIT JR. RECEPTACLE NO. 5557.
6. PART IS NOT DESIGNED FOR CURRENT SHARING.
7. PARTS ARE NOT TO BE MATED OR UN-MATED WHILE CIRCUITS ARE LIVE.
8. PART CONFORMS TO CLASS "B" REQUIREMENTS OF COSMETIC SPECIFICATION PS-45499-002.
9. 4 CIRCUIT PARTS WILL HAVE PEG DESIGN A. ALL OTHER CIRCUIT SIZES WILL HAVE PEG DESIGN B.

CKT SIZE	DIM A	DIM B
4	.709 (18.00)	.496 (12.60)
5	.874 (22.20)	.661 (16.80)
6	1.039 (26.40)	.827 (21.00)
7	1.205 (30.60)	.992 (25.20)
8	1.370 (34.80)	1.157 (29.40)
9	1.535 (39.00)	1.323 (33.60)
10	1.701 (43.20)	1.488 (37.80)
11	1.866 (47.40)	1.654 (42.00)
12	2.031 (51.60)	1.819 (46.20)

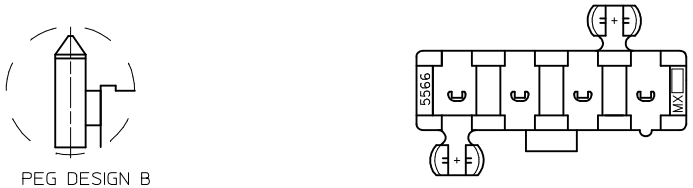

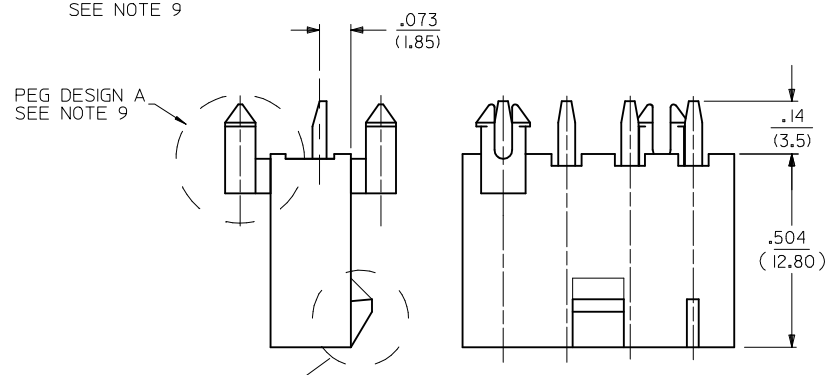

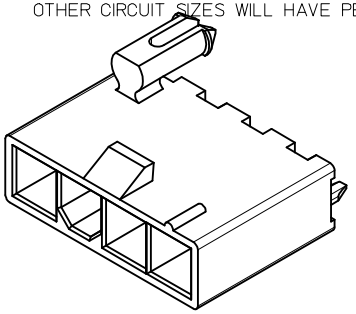

POSITIVE LOCK

PASSIVE LOCK

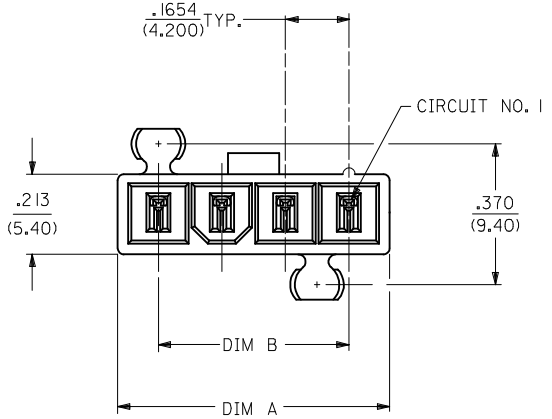

LEGEND:

5566 - N A * * - *

- CIRCUIT SIZE (04-12)
- PEG AND LOCK OPTION
  3=MTG. PEGS,POSITIVE LOCK
  4=MTG. PEGS,PASSIVE LOCK
- PLATING (SEE NOTE 2)
- HOUSING MAT'L (SEE NOTE 1)

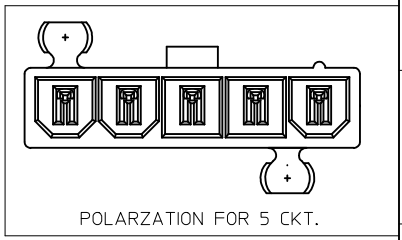

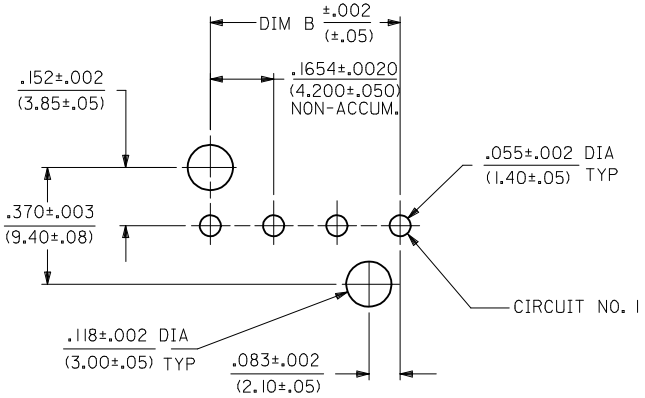

RECOMMENDED HOLE LAYOUT FOR
.070/(1.78) MAX. THICK P. C. BOARD
VIEWED FROM COMPONENT SIDE

OBS P/N'S
EC NO: UCP2014-3776 2014/03/14
DRWN:CD
CHK'D:
APPR:FSMITH 2014/03/31
DESCRIPTION
M6
REV

QUALITY SYMBOLS
E =0
C =0
P =0

GENERAL TOLERANCES (UNLESS SPECIFIED)

	mm	INCH
4 PLACES	± ---	± ---
3 PLACES	± ---	± .015
2 PLACES	± 0.38	± .020
1 PLACE	± 0.50	± ---
0 PLACE	± ---	± ---

ANGULAR ±1/2°

DRAFT WHERE APPLICABLE MUST REMAIN WITHIN DIMENSIONS

DIMENSION STYLE: IN/MM
SCALE: 4:1
DESIGN UNITS: METRIC
THIRD ANGLE PROJECTION

		DATE
DRAWN BY	KSS	1989/02/19
CHECKED BY	JTR	1989/02/19
APPROVED BY	FSMITH	2012/05/04
MATERIAL NO.	SEE CHART	

TITLE: VERTICAL HEADER ASSY WITH PEGS MINI-FIT JR SINGLE ROW

molex

DOCUMENT NO. SDA-5566-NL*

SHEET NO. 1 OF 2

SIZE C

THIS DRAWING CONTAINS INFORMATION THAT IS PROPRIETARY TO MOLEX INCORPORATED AND SHOULD NOT BE USED WITHOUT WRITTEN PERMISSION

POSITIVE LOCK WITH MTG. PEGS, 94V-2 HOUSING MATERIAL			
PART NO	ENG NO	CKT SIZE	PLATING OPTION
39-30-1049	5566-04A3	4	TIN OVER COPPER
39-30-1059	5566-05A3	5	TIN OVER COPPER
39-30-2041	5566-04A3GS	4	30 M.I. SELECT GOLD
39-30-2051	5566-05A3GS	5	30 M.I. SELECT GOLD
50-36-2453	5566-04A3S	4	BRIGHT TIN OVER NICKEL
50-36-2454	5566-05A3S	5	BRIGHT TIN OVER NICKEL
46999-0610	5566-04A3MS	4	MATTE TIN OVER NICKEL
46999-0611	5566-05A3MS	5	MATTE TIN OVER NICKEL

POSITIVE LOCK WITH MTG. PEGS, 94V-2 BLACK HOUSING			
PART NO	ENG NO	CKT SIZE	PLATING OPTION
50-29-1528	5566-04A3-BL	4	TIN OVER COPPER
50-29-1529	5566-05A3-BL	5	TIN OVER COPPER
26-01-3162	5566-04A3S-BL	4	BRIGHT TIN OVER NICKEL
26-01-3163	5566-05A3S-BL	5	BRIGHT TIN OVER NICKEL

POSITIVE LOCK WITH MTG. PEGS, 94V-0 HOUSING MATERIAL			
PART NO	ENG NO	CKT SIZE	PLATING OPTION
39-30-2040	5566-04A3-210	4	TIN OVER COPPER
39-30-2050	5566-05A3-210	5	TIN OVER COPPER
39-30-2042	5566-04A3GS-210	4	30 M.I. SELECT GOLD
39-30-2052	5566-05A3GS-210	5	30 M.I. SELECT GOLD
50-36-2356	5566-04A3S-210	4	BRIGHT TIN OVER NICKEL
50-36-2452	5566-05A3S-210	5	BRIGHT TIN OVER NICKEL
46999-0627	5566-04A3MS-210	4	MATTE TIN OVER NICKEL
46999-0628	5566-05A3MS-210	5	MATTE TIN OVER NICKEL

POSITIVE LOCK WITH MTG. PEGS, 94V-0 BLACK HOUSING			
PART NO	ENG NO	CKT SIZE	PLATING OPTION
46999-0506	5566-04A3GS-400	4	30 M.I. SELECT GOLD
46999-0507	5566-05A3GS-400	5	30 M.I. SELECT GOLD
46999-0577	5566-04A3MS-400	4	MATTE TIN OVER NICKEL
46999-0578	5566-05A3MS-400	5	MATTE TIN OVER NICKEL

PASSIVE LOCK WITH MTG. PEGS, 94V-2 HOUSING MATERIAL			
PART NO	ENG NO	CKT SIZE	PLATING OPTION
NO E.D.P.	5566-04A4GS	4	30 M.I. SELECT GOLD
NO E.D.P.	5566-05A4GS	5	30 M.I. SELECT GOLD

PASSIVE LOCK WITH MTG. PEGS, 94V-0 HOUSING MATERIAL			
PART NO	ENG NO	CKT SIZE	PLATING OPTION
NO E.D.P.	5566-04A4GS-210	4	30 M.I. SELECT GOLD
NO E.D.P.	5566-05A4GS-210	5	30 M.I. SELECT GOLD

SEE SHEET 1
EC NO: UCP2014-3776 2014/03/14
DRWN:CD
CHKD:
APPR:FSMITH 2014/03/31
DESCRIPTION
REV
M6

QUALITY SYMBOLS
E =0
E =0
E =0

GENERAL TOLERANCES (UNLESS SPECIFIED)

	mm	INCH
4 PLACES	± ---	± ---
3 PLACES	± ---	± .015
2 PLACES	± 0.38	± .020
1 PLACE	± 0.50	± ---
0 PLACE	± ---	± ---

ANGULAR ±1/2°
DRAFT WHERE APPLICABLE MUST REMAIN WITHIN DIMENSIONS

DIMENSION STYLE: IN/MM
SCALE: 1:1
DESIGN UNITS: METRIC
THIRD ANGLE PROJECTION

DRAWN BY: KSS DATE: 1989/02/19
CHECKED BY: JTR DATE: 1989/02/19
APPROVED BY: FSMITH DATE: 2012/05/04

TITLE: VERTICAL HEADER ASSY WITH PEGS MINI-FIT JR SINGLE ROW

molex

MATERIAL NO.: SEE CHART
DOCUMENT NO.: SDA-5566-NL*
SHEET NO.: 2 OF 2
SIZE: C

THIS DRAWING CONTAINS INFORMATION THAT IS PROPRIETARY TO MOLEX INCORPORATED AND SHOULD NOT BE USED WITHOUT WRITTEN PERMISSION